LASER TECH™



# Single-mode Fiber Laser

## YLLS-2000-W

Single-module continuous fiber laser adopts high efficiency 976nm bidirectional pumping technology, high electro-optical conversion efficiency, Newly updated design with an all-aluminum cabinet, lighter, smaller, better beam quality, higher power stability.

### Advantages

- Based on the high efficiency 976nm pump design, high electro-optical conversion efficiency;
- With remote Internet of Things access capability, can achieve remote services;
- Small size, light weight, easy to integrate.

### Applications

Can be used in stainless steel, carbon steel, aluminum, copper, and other metal materials cutting, welding, drilling, sheet metal cutting, hardware processing, home appliance manufacturing, 3C and other fields widely used.

GW's economical laser series is oriented to the user group with the ultimate cost performance requirement, taking economy as the core, taking into account high quality and low price, which can fully meet the daily production and use needs of customers.

- New exterior design, all aluminum body
- 976nm high performance pumping technology, EO conversion efficiency ≥40%
- Excellent beam quality, anti-reflection design, suitable for a variety of high reflective materials processing applications
- The output core diameter can be customized to meet multiple application requirements

| | | | |
|---|---|---|---|
| 976 EO conversion efficiency≥40% | ABR Easily process high anti materials | High integration | Remote Iot access |

# Single-mode Fiber Laser

## YLLS-2000-W

| Product specification parameter | YLLS-2000-W |
|---|---|
| Output Power (watt) | 2000 |
| Operating Mode | CW/Pulse |
| Output Power Range (%) | 1-100 |
| Output Laser Wavelength (nm) | 1080±10 |
| Beam Quality | $M^2 \leq 5$ |
| Interface Type | QBH |
| Delivery Fiber Core Diameter (conventional configuration, optional) | 50um |
| Cooling Method | Water-cooling |
| Ambient Temperature Range (℃) | 5-45 |
| Input Voltage | 220VAC/50Hz |
| Dimension (mm) | 483 x 483 x 89 (L×W×H) |
| Weight (kg) | 23.5 |

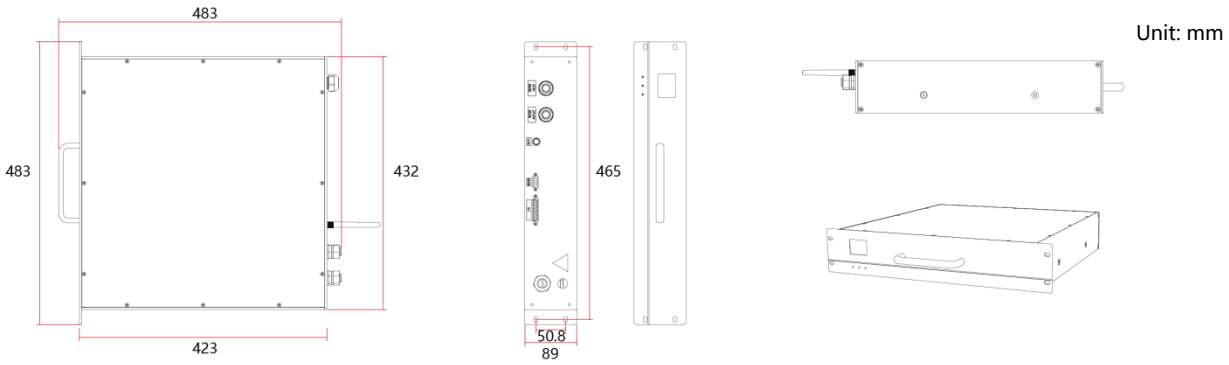


Unit: mm

Legal Notice: All product information is believed to be accurate and subject to change without notice.

Legal statement:

GW smart fiber laser products are designed in strict accordance with safety regulations. All production is in accordance with international standards and regulations currently in force in the country. Each GW laser has a warning sign as shown in the figure.




GW(Shanghai) Laser Technology Co.,Ltd. Tel: +86 2139721122 Email: sales@gwlaser.tech
Web: www.gwlaser.tech Addr: Building 5-1, No.398, Shuanglian Road, Xujing Town, Qingpu District, Shanghai